Collin County Purchasing

2019-140

Renovations to Beverage Bars in Detention Center Cluster Four

Issue Date: 3/5/2019
Questions Deadline: 3/22/2019 03:00 PM (CT)
Response Deadline: 3/28/2019 02:00 PM (CT)

Collin County Purchasing

Contact Information

Contact: JD Griffin, CPPB Buyer II
Address: 2300 Bloomdale Rd.
Ste. 3160
Purchasing
Admin. Building
Ste.3160
McKinney, TX 75071
Phone: (972) 548-4116
Fax: (972) 548-4694
Email: jgriffin@co.collin.tx.us

Event Information

Number:	2019-140
Title:	Renovations to Beverage Bars in Detention Center Cluster Four
Type:	Invitation for Bid
Issue Date:	3/5/2019
Question Deadline:	3/22/2019 03:00 PM (CT)
Response Deadline:	3/28/2019 02:00 PM (CT)
Notes:	Please log in to view bid documents.

Ship To Information

Address: 4300 Community Ave.
Justice Center Jail
McKinney, TX 75071

Billing Information

Address: 2300 Bloomdale Rd.
Ste. 3100
Auditor
Admin. Building
Ste. 3100
McKinney, TX 75071

Bid Activities

Mandatory Pre-Bid Site-Walk

3/19/2019 10:00:00 AM (CT)

Mandatory Pre-Bid Site-Walk: A Mandatory Pre-bid site walk will be held by Collin County on Tuesday, March 19, 2019 at 10:00 AM at the Collin County Detention Center Lobby, 4300 Community Ave., McKinney, TX 75071. All prospective bidders are requested to have a representative present at the site walk. It is the bidder's responsibility to review the site and documents to gain a full understanding of the requirements of the bid. Once the pre-bid site-walk has begun, late arrivals will not be allowed to join. A sign in sheet will be provided at the meeting by the Purchasing Representative. This sign-in sheet will be the official record of attendance at the meeting.

Intent to Bid

3/22/2019 5:00:00 PM (CT)

Do you intend to submit a bid?

Bid Attachments

LEGAL NOTICE-2019-140.doc

Download

Legal Notice

General_Instructions_Bid.docx

View Online

General_Instructions_Bid

Terms_of_Contract_Bid.docx

View Online

Terms_of_Contract_Bid

3.0 Insurance_Requirements.doc

View Online

Insurance Requirements

4.0 Special Conditions and Specifications.docx

View Online

Special Conditions and Specifications

Attachment A Paint Spec.pdf

View Online

Attachment A

Attachment B Burke Base Gray.pdf

View Online

Attachment B

Attachment C Masterseal CR195.pdf View Online

Attachment C

Attachment D Clear-Seal_Gloss_Satin.pdf View Online

Attachment D

Attachment E Clear Grip PDS 64010.pdf View Online

Attachment E

Attachment F.pdf View Online

Attachment F

Attachment G Moen M-Dura Chrome 2 Handle Utility Faucet.pdf View Online

Attachment G

Attachment H Typical Beverage Bar.pdf View Online

Attachment H

HB23_CIQ_-_Pur_Rev1.2019.docx View Online

Information Regarding Conflict of Interest Questionnaire

CIQ_113015.pdf View Online

Conflict of Interest Questionnaire

HB89-Chapter 2270 Verification.docx View Online

HB89/Chapter 2270 Verification

W9_2014.pdf View Online

W-9

Requested Attachments

Project Schedule
(Attachment required)

Table Specifications
(Attachment required)

HB89/Chapter 2270 Verification
(Attachment required)

W-9
(Attachment required)

Conflict of Interest Questionnaire

Bid Attributes

1	**eBid Notice** Collin County exclusively uses IonWave Technologies, Inc. (Collin County eBid) for the notification and dissemination of all solicitations. The receipt of solicitations through any other means may result in your receipt of incomplete specifications and/or addendums which could ultimately render your bid/proposal non-compliant. Collin County accepts no responsibility for the receipt and/or notification of solicitations through any other means. Please initial. _____ _____ _____ *(Required: Maximum 1000 characters allowed)*

2 Contact Information

List the contact name, email address and phone number of the main person(s) Collin County should contact in reference to this solicitation. Contact(s) shall be duly authorized by the company, corporation, firm, partnership or individual to respond to any questions, clarification, and or offers in response to this solicitation.

(Required: Maximum 4000 characters allowed)

3 Delivery

Delivery will be F.O.B. inside delivery at Collin County designated locations and all transportation charges are to be paid by the supplier to destination. Please state delivery in calendar days from date of order.

(Required: Maximum 1000 characters allowed)

4 Exceptions

Do you take exceptions to the specifications. If so, by separate attachment, please state your exceptions.

☐ Yes ☐ No

(Required: Check only one)

5 Insurance Acknowledgement

I understand that the insurance requirements of this solicitation are required and are included in the submitted pricing. A certificate of insurance shall be submitted to the Purchasing department if I am awarded all or a portion of the resulting contract. Please initial.

(Required: Maximum 1000 characters allowed)

6 Subcontractors

State the business name of all subcontractors and the type of work they will be performing under this contract. If you are fully qualified to self-perform the entire contract, please respond with "Not Applicable-Self Perform".

(Required: Maximum 4000 characters allowed)

7	**Reference No. 1** List a company or governmental agency where these same/like products /services, as stated herein, have been provided. Texas references preferred. Include the following: Company/Entity, Contact, Address, City/State/Zip, Phone, and E-Mail. _____ _____ _____ _____ _____ _____ *(Required: Maximum 4000 characters allowed)*
8	**Reference No. 2** List a company or governmental agency where these same/like products /services, as stated herein, have been provided. Texas references preferred. Include the following: Company/Entity, Contact, Address, City/State/Zip, Phone, and E-Mail. _____ _____ _____ _____ _____ _____ *(Required: Maximum 4000 characters allowed)*
9	**Reference No. 3** List a company or governmental agency where these same/like products /services, as stated herein, have been provided. Texas references preferred. Include the following: Company/Entity, Contact, Address, City/State/Zip, Phone, and E-Mail. _____ _____ _____ _____ _____ _____ *(Required: Maximum 4000 characters allowed)*

10

Preferential Treatment

The County of Collin, as a governmental agency of the State of Texas, may not award a contract to a nonresident bidder unless the nonresident's bid is lower than the lowest bid submitted by a responsible Texas resident bidder by the same amount that a Texas resident bidder would be required to underbid a nonresident bidder to obtain a comparable contract in the state in which the nonresident's principal place of business is located (Government Code, Title 10, V.T.C.A., Chapter 2252, Subchapter A). 1. Is your principal place of business in the State of Texas? 2. If your principal place of business is not in Texas, in which State is your principal place of business? 3. If your principal place of business is not in Texas, does your state favor resident bidders (bidders in your state) by some dollar increment or percentage? 4. If your state favors resident bidders, state by what dollar amount or percentage.

(Required: Maximum 4000 characters allowed)

11

Debarment Certification

I certify that neither my company nor an owner or principal of my company has been debarred, suspended or otherwise made ineligible for participation in Federal Assistance programs under Executive Order 12549, “Debarment and Suspension,” as described in the Federal Register and Rules and Regulations. Please initial.

(Required: Maximum 1000 characters allowed)

12

Immigration and Reform Act

I declare and affirm that my company is in compliance with the Immigration and Reform Act of 1986 and all employees are legally eligible to work in the United States of America. I further understand and acknowledge that any non-compliance with the Immigration and Reform Act of 1986 at any time during the term of this contract will render the contract voidable by Collin County. Please initial.

(Required: Maximum 1000 characters allowed)

13

Disclosure of Certain Relationships

Chapter 176 of the Texas Local Government Code requires that any vendor considering doing business with a local government entity disclose the vendor’s affiliation or business relationship that might cause a conflict of interest with a local government entity. Subchapter 6 of the code requires a vendor to file a conflict of interest questionnaire (CIQ) if a conflict exists. By law this questionnaire must be filed with the records administrator of Collin County no later than the 7th business day after the date the vendor becomes aware of an event that requires the statement to be filed. A vendor commits an offense if the vendor knowingly violates the code. An offense under this section is a misdemeanor. By submitting a response to this request, the vendor represents that it is in compliance with the requirements of Chapter 176 of the Texas Local Government Code. Please send completed forms to the Collin County County Clerk's Office located at 2300 Bloomdale Rd., Suite 2104, McKinney, TX 75071. Please initial.

(Required: Maximum 1000 characters allowed)

14	**Anti-Collusion Statement** Bidder certifies that its Bid/Proposal is made without prior understanding, agreement, or connection with any corporation, firm, or person submitting a Bid/Proposal for the same materials, services, supplies, or equipment and is in all respects fair and without collusion or fraud. No premiums, rebates or gratuities permitted; either with, prior to, or after any delivery of material or provision of services. Any such violation may result in Agreement cancellation, return of materials or discontinuation of services and the possible removal from bidders list. Please initial. _____ _____ _____ *(Required: Maximum 1000 characters allowed)*
15	**Disclosure of Interested Parties** Section 2252.908 of the Texas Government Code requires a business entity entering into certain contracts with a governmental entity to file with the governmental entity a disclosure of interested parties at the time the business entity submits the signed contract to the governmental entity. Section 2252.908 requires the disclosure form (Form 1295) to be signed by the authorized agent of the contracting business entity, acknowledging that the disclosure is made under oath and under penalty of perjury. Section 2252.908 applies only to a contract that requires an action or vote by the governing body of the governmental entity before the contract may be signed or has a value of at least $1 million. Section 2252.908 provides definitions of certain terms occurring in the section. Section 2252.908 applies only to a contract entered into on or after January 1, 2016. Please initial. _____ _____ _____ *(Required: Maximum 1000 characters allowed)*
16	**Notification Survey** In order to better serve our offerors, the Collin County Purchasing Department is conducting the following survey. We appreciate your time and effort expended to submit your bid. Should you have any questions or require more information please call (972) 548-4165. How did you receive notice of this request? ☐ Plano Star Courier ☐ Plan Room ☐ Collin County eBid Notification ☐ Collin County Website ☐ Other *(Required: Check only one)*
17	**Bidder Acknowledgement** Bidder acknowledges, understands the specifications, any and all addenda, and agrees to the bid terms and conditions and can provide the minimum requirements stated herein. Bidder acknowledges they have read the document in its entirety, visited the site, performed investigations and verifications as deemed necessary, is familiar with local conditions under which work is to be performed and will be responsible for any and all errors in Bid submittal resulting from Bidder's failure to do so. Bidder acknowledges the prices submitted in this Bid have been carefully reviewed and are submitted as correct and final. If Bid is accepted, vendor further certifies and agrees to furnish any and all products upon which prices are extended at the price submitted, and upon conditions in the specifications of the Invitation for Bid. Please initial. _____ _____ _____ *(Required: Maximum 1000 characters allowed)*

Bid Lines

1 State the Total Labor Price incorporated in the project.
(Response required)

Quantity: 1 UOM: lump sum Price: $ Total: $

Supplier Notes: _____

☐ No bid

☐ Alternate specification *(Attach separate sheet)*

☐ Additional notes *(Attach separate sheet)*

2 State the Total Materials Price incorporated in the project.
(Response required)

Quantity: 1 UOM: lump sum Price: $ Total: $

Supplier Notes: _____

☐ No bid

☐ Alternate specification *(Attach separate sheet)*

☐ Additional notes *(Attach separate sheet)*

Supplier Information

Company Name: _____

Contact Name: _____

Address: _____

_____

_____

_____

Phone: _____

Fax: _____

Email: _____

Supplier Notes

_____

_____

_____

_____

_____

_____

_____

_____

The undersigned hereby certifies the foregoing bid submitted by the company listed below hereinafter called “bidder” is the duly authorized agent of said company and the person signing said bid has been duly authorized to execute same. Bidder affirms that they are duly authorized to execute this contract; this company; corporation, firm, partnership or individual has not prepared this bid in collusion with any other bidder or other person or persons engaged in the same line of business; and that the contents of this bid as to prices, terms and conditions of said bid have not been communicated by the undersigned nor by any employee or agent to any other person engaged in this type of business prior to the official opening of this bid.

_____ _____

Print Name *Signature*

1.0 GENERAL INSTRUCTIONS

1.0.1 Definitions

1.0.1.1 Bidder: refers to submitter.

1.0.1.2 Vendor/Contractor/Provider: refers to a Successful Bidder/Contractor/Service Provider.

1.0.1.3 Submittal: refers to those documents required to be submitted to Collin County, by a Bidder.

1.0.1.4 IFB: refers to Invitation For Bid.

1.1 If Bidder does not wish to submit an offer at this time, please submit a No Bid.

1.2 Awards shall be made not more than ninety (90) days after the time set for opening of submittals.

1.3 Collin County is always conscious and extremely appreciative of your time and effort in preparing your submittal.

1.4 Collin County exclusively uses ionWave Technologies, Inc. (Collin County eBid) for the notification and dissemination of all solicitations. The receipt of solicitations through any other company may result in your receipt of incomplete specifications and/or addendums which could ultimately render your bid non-compliant. Collin County accepts no responsibility for the receipt and/or notification of solicitations through any other company.

1.5 A bid may not be withdrawn or canceled by the bidder prior to the ninety-first (91st) day following public opening of submittals and only prior to award.

1.6 It is understood that Collin County, Texas reserves the right to accept or reject any and/or all Bids for any or all products and/or services covered in an Invitation For Bid (IFB), and to waive informalities or defects in submittals or to accept such submittals as it shall deem to be in the best interest of Collin County.

1.7 All IFB's submitted in hard copy paper form shall be submitted in a sealed envelope, plainly marked on the outside with the IFB number and name. A hard copy paper form submittal shall be manually signed in ink by a person having the authority to bind the firm in a contract. Submittals shall be mailed or hand delivered to the Collin County Purchasing Department.

1.8 No oral, telegraphic or telephonic submittals will be accepted. IFB's may be submitted in electronic format via Collin County eBid.

1.9 All Invitation For Bids (IFB) submitted electronically via Collin County eBid shall remain locked until official date and time of opening as stated in the Special Terms and Conditions of the IFB.

1.10 Time/date stamp clock in Collin County Purchasing Department shall be the official time of receipt for all Invitation for Bids (IFB) submitted in hard copy paper form. IFB's received in the Collin County Purchasing Department after submission deadline shall be considered void and unacceptable. Absolutely no late submittals will be considered. Collin County accepts no responsibility for technical difficulties related to electronic submittals.

1.11 For hard copy paper form submittals, any alterations made prior to opening date and time must be initialed by the signer of the IFB guaranteeing authenticity. Submittals cannot be altered or amended after submission deadline.

1.12 Collin County is by statute exempt from the State Sales Tax and Federal Excise Tax; therefore, the prices submitted shall not include taxes.

1.13 Any interpretations, corrections and/or changes to an Invitation For Bid, and related Specifications or extensions to the opening/receipt date will be made by addenda to the respective document by the Collin County Purchasing Department. Questions and/or clarification requests must be submitted no later than seven (7) days prior to the opening/receipt date. Those received at a later date may not be addressed prior to the public opening. Sole authority to authorize addenda shall be vested in Collin County Purchasing Agent as entrusted by the Collin County Commissioners' Court. Addenda may be transmitted electronically via Collin County eBid.

1.13.1 Addenda will be transmitted to all that are known to have received a copy of the IFB/RFQ/RFP/RFI/CSP and related Specifications. However, it shall be the sole responsibility of the Bidder/Quoter/Offeror to verify issuance/non-issuance of addenda and to check all avenues of document availability (i.e. **Collin County eBid** **https://collincountytx.ionwave.net/**, telephoning Purchasing Department directly, etc.) prior to opening/receipt date and time to insure Bidder/Quoter/Offeror's receipt of any addenda issued. Bidder/Quoter/Offeror shall acknowledge receipt of all addenda.

1.14 All materials and services shall be subject to Collin County approval.

1.15 Collin County reserves the right to make award in whole or in part as it deems to be in the best interest of the County.

1.16 Any reference to model/make and/or manufacturer used in specifications is for descriptive purposes only. Products/materials of like quality will be considered.

1.17 Bidders taking exception to the specifications shall do so at their own risk. By offering substitutions, Bidder shall state these exceptions in the section provided in the IFB or by attachment. Exception/substitution, if accepted, must meet or exceed specifications stated therein. Collin County reserves the right to accept or reject any and/or all of the exception(s)/substitution(s) deemed to be in the best interest of the County.

1.19 Minimum Standards for Responsible Prospective Bidders: A prospective Bidder must meet the following minimum requirements:

1.19.1 have adequate financial resources, or the ability to obtain such resources as required;

1.19.2 be able to comply with the required or proposed delivery/completion schedule;

1.19.3 have a satisfactory record of performance;

1.19.4 have a satisfactory record of integrity and ethics;

1.19.5 be otherwise qualified and eligible to receive an award.

Collin County may request documentation and other information sufficient to determine Bidder's ability to meet these minimum standards listed above.

1.20 Vendor shall bear any/all costs associated with it's preparation of an IFB.

1.21 Public Information Act: Collin County is governed by the Texas Public Information Act, Chapter 552 of the Texas Government Code. All information submitted by prospective bidders during the bidding process is subject to release under the Act.

1.22 The Bidder shall comply with Commissioners' Court Order No. 2004-167-03-11, County Logo Policy.

1.23 Interlocal Agreement: Successful bidder agrees to extend prices and terms to all entities that has entered into or will enter into joint purchasing interlocal cooperation agreements with Collin County.

1.24 Bid Openings: All bids submitted will be read at the county's regularly scheduled bid opening for the designated project. However, the reading of a bid at bid opening should be not construed as a comment on the responsiveness of such bid or as any indication that the county accepts such bid as responsive.

The county will make a determination as to the responsiveness of bids submitted based upon compliance with all applicable laws, Collin County Purchasing Guidelines, and project documents, including but not limited to the project specifications and contract documents. The county will notify the successful bidder upon award of the contract and, according to state law; all bids received will be available for inspection at that time.

1.25 Bidder shall comply with all local, state and federal employment and discrimination laws and shall not discriminate against any employee or applicant for employment because of race, color, religion, sex, age, national origin or any other class protected by law.

2.0 TERMS OF CONTRACT

2.1 A bid, when properly accepted by Collin County, shall constitute a contract equally binding between the Vendor/Contractor/Provider and Collin County. No different or additional terms will become part of this contract with the exception of a Change Order.

2.2 No oral statement of any person shall modify or otherwise change, or affect the terms, conditions or specifications stated in the resulting contract. All Amendments and/or Change Orders to the contract will be made in writing by Collin County Purchasing Agent.

2.3 No public official shall have interest in the contract, in accordance with Vernon's Texas Codes Annotated, Local Government Code Title 5, Subtitle C, Chapter 171.

2.4 The Vendor/Contractor/Provider shall comply with Commissioners' Court Order No. 96-680-10-28, Establishment of Guidelines & Restrictions Regarding the Acceptance of Gifts by County Officials & County Employees.

2.5 Design, strength, quality of materials and workmanship must conform to the highest standards of manufacturing and engineering practice.

2.6 Bids must comply with all federal, state, county and local laws concerning the type(s) of product(s)/service(s)/equipment/project(s) contracted for, and the fulfillment of all ADA (Americans with Disabilities Act) requirements.

2.7 All products must be new and unused, unless otherwise specified, in first-class condition and of current manufacture. Obsolete products, including products or any parts not compatible with existing hardware/software configurations will not be accepted.

2.8 Vendor/Contractor/Provider shall provide any and all notices as may be required under the Drug-Free Work Place Act of 1988, 28 CFR Part 67, Subpart F, to its employees and all sub-contractors to insure that Collin County maintains a drug-free work place.

2.9 Vendor/Contractor/Provider shall defend, indemnify and save harmless Collin County and all its officers, agents and employees and all entities, their officers, agents and employees who are participating in this contract from all suits, claims, actions, damages (including personal injury and or property damages), or demands of any character, name and description, (including attorneys' fees, expenses and other defense costs of any nature) brought for or on account of any injuries or damages received or sustained by any person, persons, or property on account of Vendor/Contractor/Provider's breach of the contract arising from an award, and/or any negligent act, error, omission or fault of the Vendor/Contractor/Provider, or of any agent, employee, subcontractor or supplier of Vendor/Contractor/Provider in the execution of, or performance under, any contract which may result from an award. Vendor/Contractor/Provider shall pay in full any judgment with costs, including attorneys' fees and expenses which are rendered against Collin County and/or participating entities arising out of such breach, act, error, omission and/or fault.

2.10 Expenses for Enforcement. In the event either Party hereto is required to employ an attorney to enforce the provisions of this Agreement or is required to commence legal proceedings to enforce the provisions hereof, the prevailing Party shall be entitled to recover from the other, reasonable attorney's fees and court costs incurred in connection with such enforcement, including collection.

2.11 If a contract, resulting from a Collin County IFB is for the execution of a public work, the following shall apply:

> 2.11.1 In accordance with V.T.C.A. 2253.021, a governmental agency that makes a public work contract with a prime contractor shall require the contractor, before beginning work, to execute to the governmental entity a Payment Bond if the contract is in excess of $25,000.00. Such bond shall

be in the amount of the contract payable to the governmental entity and must be executed by a corporate surety in accordance with Section 1, Chapter 87, Acts of the 56th Legislature, Regular Session, 1959 (Article 7.19-1 Vernon's Texas Insurance Code).

2.11.2 In accordance with V.T.C.A. 2253.021, a governmental agency that makes a public work contract with a prime contractor shall require the contractor, before beginning work, to execute to the governmental entity a Performance Bond if the contract is in excess of $100,000.00. Such bond shall be in the amount of the contract payable to the governmental entity and must be executed by a corporate surety in accordance with Section 1, Chapter 87, Acts of the 56th Legislature, Regular Session, 1959 (Article 7.19-1 Vernon's Texas Insurance Code).

2.12 Purchase Order(s) shall be generated by Collin County to the vendor. Collin County will not be responsible for any orders placed/delivered without a valid purchase order number.

2.13 The contract shall remain in effect until any of the following occurs: delivery of product(s) and/or completion and acceptance by Collin County of product(s) and/or service(s), contract expires or is terminated by either party with thirty (30) days written notice prior to cancellation and notice must state therein the reasons for such cancellation. Collin County reserves the right to terminate the contract immediately in the event the Vendor/Contractor/Provider fails to meet delivery or completion schedules, or otherwise perform in accordance with the specifications. Breach of contract or default authorizes the County to purchase elsewhere and charge the full increase in cost and handling to the defaulting Vendor/Contractor/Provider.

2.14 Collin County Purchasing Department shall serve as Contract Administrator or shall supervise agents designated by Collin County.

2.15 All delivery and freight charges (FOB Inside delivery at Collin County designated locations) are to be included as part of the bid price. All components required to render the item complete, installed and operational shall be included in the total bid price. Collin County will pay no additional freight/delivery/installation/setup fees.

2.16 Vendor/Contractor/Provider shall notify the Purchasing Department immediately if delivery/completion schedule cannot be met. If delay is foreseen, the Vendor/Contractor/Provider shall give written notice to the Purchasing Agent. The County has the right to extend delivery/completion time if reason appears valid.

2.17 The title and risk of loss of the product(s) shall not pass to Collin County until Collin County actually receives and takes possession of the product(s) at the point or points of delivery. Collin County shall generate a purchase order(s) to the Vendor/Contractor/Provider and the purchase order number must appear on all itemized invoices.

2.18 Invoices shall be mailed directly to the Collin County Auditor's Office, 2300 Bloomdale Road, Suite 3100, McKinney, Texas 75071. All invoices shall show:

2.18.1 Collin County Purchase Order Number;

2.18.2 Vendor's/Contractor's/Provider's Name, Address and Tax Identification Number;

2.18.3 Detailed breakdown of all charges for the product(s) and/or service(s) including applicable time frames.

2.19 Payment will be made in accordance with V.T.C.A., Government Code, Title 10, Subtitle F, Chapter 2251.

2.20 All warranties shall be stated as required in the Uniform Commercial Code.

2.21 The Vendor/Contractor/Provider and Collin County agree that both parties have all rights, duties, and remedies available as stated in the Uniform Commercial Code.

2.22 The Vendor/Contractor/Provider agree to protect Collin County from any claims involving infringements of patents and/or copyrights.

2.23 The contract will be governed by the laws of the State of Texas. Should any portion of the contract be in conflict with the laws of the State of Texas, the State laws shall invalidate only that portion. The remaining portion of the contract shall remain in effect. The contract is performable in Collin County, Texas.

2.24 The Vendor/Contractor/Provider shall not sell, assign, transfer or convey the contract, in whole or in part, without the prior written approval from Collin County.

2.25 The apparent silence of any part of the specification as to any detail or to the apparent omission from it of a detailed description concerning any point, shall be regarded as meaning that only the best commercial practices are to prevail. All interpretations of the specification shall be made on the basis of this statement.

2.26 Vendor/Contractor/Provider shall not fraudulently advertise, publish or otherwise make reference to the existence of a contract between Collin County and Vendor/Contractor/Provider for purposes of solicitation. As exception, Vendor/Contractor/Provider may refer to Collin County as an evaluating reference for purposes of establishing a contract with other entities.

2.27 The Vendor/Contractor/Provider understands, acknowledges and agrees that if the Vendor/Contractor/Provider subcontracts with a third party for services and/or material, the primary Vendor/Contractor/Provider (awardee) accepts responsibility for full and prompt payment to the third party. Any dispute between the primary Vendor/Contractor/Provider and the third party, including any payment dispute, will be promptly remedied by the primary vendor. Failure to promptly render a remedy or to make prompt payment to the third party (subcontractor) may result in the withholding of funds from the primary Vendor/Contractor/Provider by Collin County for any payments owed to the third party.

2.28 Vendor/Contractor/Provider shall provide Collin County with diagnostic access tools at no additional cost to Collin County, for all Electrical and Mechanical systems, components, etc., procured through this contract.

2.29 Criminal History Background Check: If required, ALL individuals may be subject to a criminal history background check performed by the Collin County Homeland Security prior to access being granted to Collin County. Upon request, Vendor/Contractor/Provider shall provide list of individuals to Collin County Purchasing Department within five (5) working days.

2.30 Non-Disclosure Agreement: Where applicable, vendor shall be required to sign a non-disclosure agreement acknowledging that all information to be furnished is in all respects confidential in nature, other than information which is in the public domain through other means and that any disclosure or use of same by vendor, except as provided in the contract/agreement, may cause serious harm or damage to Collin County. Therefore, Vendor agrees that Vendor will not use the information furnished for any purpose other than that stated in contract/agreement, and agrees that Vendor will not either directly or indirectly by agent, employee, or representative disclose this information, either in whole or in part, to any third party, except on a need to know basis for the purpose of evaluating any possible transaction. This agreement shall be binding upon Collin County and Vendor, and upon the directors, officers, employees and agents of each.

2.31 Vendors/Contractors/Providers must be in compliance with the Immigration and Reform Act of 1986 and all employees specific to this solicitation must be legally eligible to work in the United States of America.

2.32 Certification of Eligibility: This provision applies if the anticipated Contract exceeds $100,000.00 and as it relates to the expenditure of federal grant funds. By submitting a bid or proposal in response to this solicitation, the Bidder certifies that at the time of submission, he/she is not on the Federal Government's list of suspended, ineligible, or debarred contractors. In the event of placement on the list between the time of bid/proposal submission and time of award, the Bidder will notify the Collin County Purchasing Agent. Failure to do so may result in terminating this contract for default.

2.33 Notice to Vendors/Contractors/Providers delivering goods or performing services within the Collin County Detention Facility: The Collin County Detention Facility houses persons who have been charged with and/or convicted of serious criminal offenses. When entering the Detention Facility, you could: (1) hear obscene or graphic language; (2) view partially clothed male inmates; (3) be subjected to verbal abuse or taunting; (4) risk physical altercations or physical contact, which could be minimal or possibly serious; (5) be exposed to communicable or infectious diseases; (6) be temporarily detained or prevented from immediately leaving the Detention Facility in the case of an emergency or "lockdown"; and (7) subjected to a search of your person or property. While the Collin County Sheriff's Office takes every reasonable precaution to protect the safety of visitors to the Detention Facility, because of the inherently dangerous nature of a Detention Facility and the type of the persons incarcerated therein, please be advised of the possibility of such situations exist and you should carefully consider such risks when entering the Detention Facility. By entering the Collin County Detention Facility, you acknowledge that you are aware of such potential risks and willingly and knowingly choose to enter the Collin County Detention Facility.

2.34 Delays and Extensions of Time when applicable:

2.34.1 If the Vendor/Contractor/Provider is delayed at any time in the commence or progress of the Work by an act or neglect of the Owner or Architect/Engineer, or of an employee of either, or of a separate contractor employed by the Owner, or by changes ordered in the Work, or by labor disputes, fire, unusual delay in deliveries, unavoidable casualties or other causes beyond the Vendor/Contractor/Provider's control, or by delay authorized by the Owner pending mediation and arbitration, or by other causes which the Owner or Architect/Engineer determines may justify delay, then the Contract Time shall be extended by Change Order for such reasonable time as the Owner/Architect may determine.

2.34.2 If adverse weather conditions are the basis for a Claim for additional time, such Claim shall be documented by data substantiating that weather conditions were abnormal for the period of time and could not have been reasonably anticipated, and that the weather conditions had an adverse effect on the scheduled construction.

2.35 Disclosure of Certain Relationships: Chapter 176 of the Texas Local Government Code requires that any vendor considering doing business with a local government entity disclose the vendor's affiliation or business relationship that might cause a conflict of interest with a local government entity. Subchapter 6 of the code requires a vendor to file a conflict of interest questionnaire (CIQ) if a conflict exists. By law this questionnaire must be filed with the records administrator of Collin County no later than the 7th business day after the date the vendor becomes aware of an event that requires the statement to be filed. A vendor commits an offense if the vendor knowingly violates the code. An offense under this section is a misdemeanor. By submitting a response to this request, the vendor represents that it is in compliance with the requirements of Chapter 176 of the Texas Local Government Code. Please send completed forms to the Collin County, County Clerk's Office located at 2300 Bloomdale Rd., Suite 2104, McKinney, TX 75071.

2.36 Disclosure of Interested Parties: Section 2252.908 of the Texas Government Code requires a business entity entering into certain contracts with a governmental entity to file with the governmental entity a disclosure of interested parties at the time the business entity submits the signed contract to the governmental entity. Section 2252.908 requires the disclosure form (Form 1295) to be signed by the authorized agent of the contracting business entity, acknowledging that the disclosure is made under oath and under penalty of perjury. Section 2252.908 applies only to a contract that requires an action or vote by the governing body of the governmental entity before the contract may be signed or has a value of at least $1 million. Section 2252.908 provides definitions of certain terms occurring in the section. Section 2252.908 applies only to a contract entered into on or after January 1, 2016.

2.37 Vendors/Contractors/Providers must be in compliance with the provisions of Section 2270.001 of the Texas Government Code which states a governmental entity may not enter into a contract with a company for goods or services unless the contract contains a written verification from the company that it: (1) does not boycott Israel; and, (2) will not boycott Israel during the term of the contract. By submitting a response to a Collin County solicitation, the vendor will be required to sign the Chapter 2270 Verification form prior to a recommendation of the contract. This Act is effective September 1, 2017.

2.38 Vendors/Contractors/Providers must be in compliance with the provisions of Section 2252.152 and Section 2252.153 of the Texas Government Code which states, in part, contracts with companies engaged in business with Iran, Sudan, or Foreign Terrorist Organizations are prohibited. A governmental entity may not enter into a contract with a company that is listed on the Comptroller of the State of Texas website identified under Section 806.051, Section 807.051 or Section 2253.253 which do business with Iran, Sudan or any Foreign Terrorist Organization. This Act is effective September 1, 2017.

NOTE: All other terms and conditions (i.e. Insurance Requirements, Bond Requirements, etc.) shall be stated in the individual IFB Solicitation documents as Special Terms, Conditions and Specifications.

3.0 INSURANCE REQUIREMENTS

3.1 Before commencing work, the vendor shall be required, at its own expense, to furnish the Collin County Purchasing Agent with certified copies of all insurance certificate(s) indicating the coverage to remain in force throughout the term of this contract.

3.1.1 **Commercial General Liability** insurance including but not limited to the coverage indicated below. Coverage shall not exclude or limit Products/Completed Operations, Contractual Liability, or Cross Liability.

- Each Occurrence: $1,000,000
- Personal & Adv Injury: $1,000,000
- Products/Completed Operation: $2,000,000
- General Aggregate: $2,000,000

3.1.2 **Workers Compensation** insurance as required by the laws of Texas, and Employers' Liability.

Employers' Liability
- Liability, Each Accident: $500,000
- Disease-Each Employee: $500,000
- Disease – Policy Limit: $500,000

3.1.3 **Commercial Automobile Liability** insurance including owned, non-owned, and hired vehicles used in connection with the contract.

- Combined Single Limit – Each Accident: $1,000,000

3.1.4 **Umbrella/Excess Liability** insurance**.**

- Each Occurrence/Aggregate: $1,000,000

3.2 With reference to the foregoing insurance requirement, the vendor shall endorse applicable insurance policies as follows:

3.2.1 A waiver of subrogation in favor of Collin County, its officials, employees, volunteers and officers shall be provided for General Liability, Commercial Automobile Liability and Workers' Compensation.

3.2.2 The vendor's insurance coverage shall name Collin County as additional insured under the General Liability policy.

3.2.3 All insurance policies shall be endorsed to require the insurer to immediately notify Collin County of any decrease in the insurance coverage limits.

3.2.4 All insurance policies shall be endorsed to the effect that Collin County will receive at least thirty (30) days notice prior to cancellation, non-renewal or termination of the policy.

3.2.5 All copies of Certificates of Insurance shall reference the project/contract number.

3.3 All insurance shall be purchased from an insurance company that meets the following requirements:

3.3.1 A financial rating of A+VII or better as assigned by the BEST Rating Company or equivalent.

3.4 Certificates of Insurance shall be prepared and executed by the insurance company or its authorized agent, and shall contain provisions representing and warranting the following:

3.4.1 Sets forth all endorsements and insurance coverages according to requirements and instructions contained herein.

3.4.2 Sets forth the notice of cancellation or termination to Collin County.

4.0 SPECIAL CONDITIONS AND SPECIFICATIONS

4.1 Authorization: By order of the Commissioners' Court of Collin County, Texas sealed bids will be received for IFB 2019-140.

4.2 Purpose: The intended use/purpose for this Invitation For Bid is to describe the requirements for Renovations to Beverage Bars in Detention Center Cluster Four.

4.3 Mandatory Pre-Bid Site-Walk: A Mandatory Pre-bid site walk will be held by Collin County on Tuesday, March 19, 2019 at 10:00 AM at the Collin County Detention Center Lobby, 4300 Community Ave., McKinney, TX 75071. All prospective bidders are requested to have a representative present at the site walk. It is the bidder's responsibility to review the site and documents to gain a full understanding of the requirements of the bid. Once the pre-bid site-walk has begun, late arrivals will not be allowed to join. A sign in sheet will be provided at the meeting by the Purchasing Representative. This sign-in sheet will be the official record of attendance at the meeting.

4.4 Term: Provide for a contract commencing on the date of the award and continuing until the project is complete.

4.5 Funding: Funds for payment for Collin County expenditures have been provided through the Collin County budget approved by the Commissioners' Court for this fiscal year only. All other participating entities expenditures have been provided through their entity's governing body for this fiscal year only. State of Texas statutes prohibit any obligation of public funds beyond the fiscal year for which a budget has been approved. Therefore, anticipated orders or other obligations that arise past the end of the current fiscal year shall be subject to budget approval.

4.6 Price Reduction: If during the life of the contract, the vendor's net prices to its customers for the same product(s) and/or services shall be reduced below the contracted price, it is understood and agreed that Collin County shall receive such price reduction.

4.7 Delivery/Completion/Response Time: Vendor shall state the number of calendar days to complete services at the County's designated location after receipt of purchase order in the space provided on Attribute 3.

4.8 Delivery/Setup/Installation Location: Location for delivery and installation are Collin County Detention Center, 4300 Community Ave., McKinney, TX 75071. Delivery, assembly, set-up and installation shall be included in the bid price.

4.9 Testing: Testing may be performed at the request of Collin County, by an agent so designated by the County, without expense to Collin County.

4.10 Samples/Demos: When requested, samples/demos shall be furnished to the County at no expense.

4.11 Approximate Expenditure: The approximate expenditure by Collin County for this project is $50,000.00. Estimated expenditure does not constitute an order, but only implies the probable quantity the County will use.

4.12 Evaluation and Award: Award of the contract shall be made to the responsive bidder who submits the lowest and best bid meeting specifications.

4.13 Warranties: If within one year after final acceptance of the work by Collin County, any of the work or material is found to be defective or not in accordance with the specifications of the contract, the contractor shall correct it promptly after receipt of a written notice from the County to do so. This obligation shall survive termination or completion of the contract. The County shall give such notice promptly after discovery of the condition.

If any materials or equipment utilized in this project are covered by a standard manufacturer's warranty greater than requirements specified herein, Contractor shall extend that coverage to Collin County.

The contractor shall remove from the site all portions of the work which are defective or nonconforming and which have not been corrected unless removal is waived in writing by the County.

4.14 Subcontractors: Bidder shall state names of all subcontractors and the type of work they will be performing on Attribute 6. If a bidder fails to specify a subcontractor, then he shall be deemed to have agreed that he is fully qualified to perform the contract himself, and that he will fully perform the contract himself.

No bidder whose bid is accepted shall (a) substitute any subcontractor, or (b) permit a subcontract to be voluntarily assigned or transferred or allow it to be performed by anyone other than the original subcontractor listed in the original bid without approval in writing from the Collin County Purchasing Department.

The successful bidder further agrees that Collin County and its agents, servants and employees shall not be liable for any loss or damage resulting from personal injury, physical loss, harassment of or discrimination against employee or other violations of the provisions of this contract occasioned by the acts or omissions of the successful bidder's sub-contractors, their agents or employees. The indemnification provisions of this contract shall apply to all sub-contractors.

4.15 Substitutions: No substitution will be considered unless written request has been submitted to Collin County for approval at least seven (7) consecutive calendar days prior to the date for receipt of bids. Substitution requests shall include supporting documentation sufficient to evaluate the request. Substitution requests shall be emailed to jgriffin@co.collin.tx.us.

If Collin County approves a proposed substitution, such approval will be set forth in an Addendum.

If bidder fails to submit a substitution request, the County will assume bidder is bidding exact materials as specified in the bid documents and if awarded a contract, shall furnish same.

4.16 Bid Documents: Contractor shall notify Collin County prior to bid if the bid documents are missing scope, incomplete or are contrary to actual site conditions.

4.17 Project Requirements and Clarifications:

4.17.1 Bidder shall be responsible for field verification of actual site conditions and responsible to confirm dimensions to complete the scope of work as described in this specification. All dimensions provided in the bid documents are approximate.

4.17.2 All work in this scope description is located inside an active Detention Holding Center so expect delays on entry and exit. Allow thirty (30) to sixty (60) minutes delay per day to enter and exit the facility.

4.17.3 Schedule all work at the Collin County Adult Detention Center with the following time and days; Monday through Friday from 7:00 am to 4:00 pm with a one (1) hour mandatory lunch break.

4.17.4 The staging requirements are as follows: work in first POD until completed then allow twenty four (24) hours from completion for Sheriff's Deputies to move inmates. Repeat process until all four PODs are completed.

4.17.5 Bidder shall submit a schedule for the project with their bid. Allow time in the project schedule for materials lead times and the noted staging delays.

4.17.6 All screws, anchors, sealants and fasteners shall be detention grade to match the existing finishes.

4.17.7 All materials shall be installed per the manufacturer's installation recommendations.

4.17.8 Once awarded the contract, a mandatory background check, performed by Collin County, will be required for all persons who will work onsite.

4.17.9 A fulltime escort by a Facilities Technician or Detention Officer shall be required while contractor is working onsite.

4.17.10 Collin County will not accept or sign for contractor shipments. No drop shipments shall be allowed without the contractor present to receive materials.

4.17.11 Collin County will not be responsible for contractor equipment or personnel safety.

4.17.12 Contractor shall not use County dumpsters or store any material onsite.

4.17.13 Contractor shall not have onsite storage or office space available.

4.18 Scope: Successful contractor shall provide demolition of four (4) original beverage bars in Cluster Four POD's A, B, C and D of the Adult Detention Center and provide and install four (4) new stainless steel tables with sinks. Contractor shall provide all equipment, components, materials, parts and skilled labor required to complete the installation and include cleanup of the job site. All components shall be new and unused; rebuilt or refurbished components will not be accepted.

4.19 Demolition:

4.19.1 Remove the water line and drain from wall and sink in each existing beverage bar.

4.19.2 Remove approximately ten (10) feet of existing counter top, base cabinet and upper cabinet in each POD.

4.19.3 Refer to Attachment H for picture of typical existing beverage bar.

4.20 Repair:

4.20.1 Patch block wall and prepare all imperfections where cabinets were removed.

4.20.2 Paint the beverage bar area walls with two (2) coats of paint. Area to be painted in each beverage bar area is approximately twelve (12) feet tall by sixteen (16) feet wide.

4.20.3 Clean and remove all staining from the concrete floor in each beverage bar area. Apply two (2) coats of sealer with the antiskid additive. Each beverage bar floor area is approximately sixty (60) square feet.

4.20.4 Install new base trim on the concrete block walls in each beverage bar area. Each beverage bar floor area requires approximately sixteen (16) linear feet of new base.

4.21 Tables with Sinks Installation:

4.21.1 Install new tables with welded sinks with a new faucet in each beverage bar area. The table will need to be adjusted to set level and shall be lagged to the rear wall with plumbers strap on each side at the leg support; two (2) straps under the table top and two (2) straps under the bottom shelf.

4.21.2 Connect the new sinks with the new faucets to the new plumbing as required. Provide two (2) new 3/8" supply water lines with stainless steel braided protective covering, new drain line material and any accessories required to provide full function.

4.22 Materials Specifications:

4.22.1 Wall Paint: Sherwin Williams PNT 1 Industrial Epoxy. Refer to Attachment A.

4.22.1.1 Paint shall be Sherwin Williams with no substitutions per County Building Maintenance Standardization of Finishes and Equipment Court Order No. 2018-258-03-19.

4.22.2 Floor Base: Burke "Gray" (Color and size to match existing). Refer to Attachment B.

4.22.3 Security Sealant: MasterSeal CR 195 Non-Sag or Collin County approved equal. Refer to Attachment C.

4.22.4 Concrete Floor Sealer: Seal Krete Clear-Seal or Collin County approved equal. Refer to Attachment D.

4.22.5 Antiskid Additive: Clear Grip PDS 64010 or Collin County approved equal. Refer to Attachment E.

4.23 Table with Welded Sink Specifications:

4.23.1 Dimensions: Thirty (30) inches wide by one hundred and eight (108) inches long.

4.23.2 Height: Thirty eight (38) inches to top of backsplash from finish floor; thirty five (35) inches to top of table.

4.23.3 Material: Fourteen (14) gauge, three hundred and four (304) stainless steel.

4.23.4 Leg Construction: Three (3) inch diameter round galvanized steel with adjustable steel bullet feet. Each table shall have six (6) legs.

4.23.5 Capacity: Minimum twelve hundred (1200) pounds.

4.23.6 Under shelf: Fourteen (14) gauge, three hundred and four (304) stainless steel

4.23.7 Sink Dimensions: Sixteen (16) inches by twenty (20) inches by twelve (12) inches deep.

4.23.8 Sink Placement: Two (2) tables require left hand sinks and two (2) tables require right hand sinks.

4.23.9 Refer to Attachment F for concept drawing and typical table with sink.

4.23.10 Bidder shall submit specifications of table being bid with their bid.

4.24 Faucet Specifications:

4.24.1 Moen M-Dura Chrome two (2) handle utility faucet or Collin County approved equal. Refer to Attachment G.

4.24.2 Placement: Deck mounted with four (4) inch centers from the center of the sink.

PRO INDUSTRIAL™

113.01

PRE-CATALYZED WATERBASED EPOXY

K45-150 SERIES — EG-SHEL
K46-150 SERIES — SEMI-GLOSS

As of 06/24/2015, Complies with:			
OTC	Yes	LEED® 09 CI	Yes
SCAQMD	No	LEED® 09 NC	Yes
CARB	Yes	LEED® 09 CS	Yes
CARB SCM 2007	Yes	NGBS	Yes
MPI	Yes		

CHARACTERISTICS

Pro Industrial Pre-Catalyzed Waterbased Epoxies are single-component pre-catalyzed waterborne acrylic epoxies that offers the adhesion, durability and resistance to stains and most cleaning solvents usually characteristic of two-component waterborne acrylic epoxy products.

These products can be applied over a wide variety of primers on properly prepared interior metal, wood, masonry, plaster and drywall.

- Interior institutional/commercial high maintenance areas
- Upgrade surfaces painted with conventional coatings with a high performance protection system with excellent adhesion
- Corrosion and Chemical resistant
- Hospitals and Schools
- Institutional dining and kitchen areas
- Suitable for use in USDA inspected facilities

Color: most colors

Recommended Spread Rate per coat:
4.0 mils wet; 1.5 mils dry
350 - 400 sq ft/gal

NOTE: Brush or roll application may require multiple coats to achieve maximum film thickness and uniformity of appearance.

Drying Time @ 4.0 mils wet, 50% RH, 77°F: temperature and humidity dependent

Touch: 1 hour
Recoat: 8 hours

Drying time is temperature, humidity, and film thickness dependent. If this product dries 72 hours or longer it must be sanded before it is recoated. This product is fully cured in approximately 5 - 7 days.

Finish:
Eg-Shel 20 - 30 units @ 85°
Semi-Gloss 55 - 65 units @ 60°

Flash Point: N/A

Shelf Life: 36 months, unopened
Store indoors at 40°F to 100°F.

Tinting with CCE or BAC:
Use SherCOLOR Formulation System
K45W00151

VOC (less exempt solvents):
135 g/L; 1.12 lb/gal

Volume Solids: 36 ± 2%

Weight Solids: 51 ± 2%

Weight per Gallon: 10.63 lb ± 0.2 lb

RECOMMENDED SYSTEMS

Block
1 ct. Loxon Block Surfacer
2 cts. Pro Industrial Pre-Catalyzed Epoxy

Drywall
1 ct. ProMar 200 Zero VOC Primer
2 cts. Pro Industrial Pre-Catalyzed Epoxy

Masonry
1 ct. Loxon Concrete & Masonry Primer
2 cts. Pro Industrial Pre-Catalyzed Epoxy

Steel, Aluminum, Galvanized
1 ct. Pro Industrial Pro-Cryl Primer
2 cts. Pro Industrial Pre-Catalyzed Epoxy

Wood
1 ct. Premium Wall and Wood Primer
2 cts. Pro Industrial Pre-Catalyzed Epoxy

System Tested:
Substrate: Steel
Surface Preparation: SSPC-SP6
Primer: 1 ct. DTM Acrylic Primer
Finish: 1 ct. Pro Industrial Pre-Catalyzed Epoxy Eg-Shel

Adhesion
Method: ASTM D3359
Result: 5B
100% Adhesion for light colors; Darker colors require longer cure time for same level of adhesion

Block Resistance
Lab Assessment Excellent

Pencil Hardness:
Method: ASTM D3363
Result: 2B

Scrub Resistance
Method: ASTM D 2486
Result: 500 - 600cycles
with Stiff Bristle Brush and Pumice Scrub Media

Chemical Resistance
ASTM D 1308 Rating:

Excellent Resistance	•
Limited Resistance	x

Distilled Water (Hot and at Room Temperature) ..... •
Ethyl Alcohol ..... •
Vinegar (3% acetic acid) ..... •
Alkali (10% Sodium Hydroxide)..... •
Acid (10% Sulfuric Acid)..... •
Soap (10% Fantastik®)..... •
50/50 Xylene/Mineral Spirits ..... •

Mildew Resistant This coating contains agents which inhibit the growth of mildew on the surface of this coating film.

Stain Resistance
ASTM D 3023 Rating:

Excellent Resistance	•
Limited Resistance	x

Mustard ..... •
Grape Juice..... •
Red Crayon.....x
Lipstick, Red ..... •
Permanent Ink.....x
Coffee ..... •
10% Sodium Hydroxide (alkali) ..... •
Acetic Acid ..... •

continued on back

SURFACE PREPARATION

WARNING! Removal of old paint by sanding, scraping or other means may generate dust or fumes that contain lead. Exposure to lead dust or fumes may cause brain damage or other adverse health effects, especially in children or pregnant women. Controlling exposure to lead or other hazardous substances requires the use of proper protective equipment, such as a properly fitted respirator (NIOSH approved) and proper containment and cleanup. For more information, call the National Lead Information Center at 1-800-424-LEAD (in US) or contact your local health authority.

Remove all surface contamination including mildew by washing with an appropriate cleaner, rinse thoroughly and allow to dry. Scrape and sand peeled or checked paint to a sound surface. Sand glossy surfaces dull. Seal stains from water, smoke, ink, pencil, grease, etc. with an appropriate primer/sealer.

Iron & Steel - Minimum surface preparation is Hand Tool Clean per SSPC-SP2. Remove all oil and grease from surface per SSPC-SP1. For better performance, use Commercial Blast Cleaning per SSPC-SP6. Primer recommended for best performance.

Aluminum - Remove all oil, grease, dirt, oxide and other foreign material per SSPC-SP1.

Galvanizing - Allow to weather a minimum of six months prior to coating. Solvent Clean per SSPC-SP1. When weathering is not possible, or the surface has been treated with chromates or silicates, first Solvent Clean per SSPC-SP1 and apply a test patch. Allow paint to dry at least one week before testing adhesion. If adhesion is poor, brush blasting per SSPC-SP7 is necessary to remove these treatments. Rusty galvanizing requires a minimum of Hand Tool Cleaning per SSPC-SP2, prime the area the same day as cleaned.

Concrete and Masonry - For surface preparation, refer to SSPC-SP13/NACE 6 or ICRI 03732, CSP 1-3. Surfaces should be thoroughly cleaned and dry. Surface temperatures must be at least 55°F before filling. If required for a smoother finish, use the recommended filler/surfacer. The filler/surfacer must be thoroughly dry before topcoating per manufacturer's recommendations.
Weathered masonry and soft or porous cement board must be brush blasted or power tool cleaned to remove loosely adhering contamination and to get to a hard, firm surface. Apply one coat Loxon Conditioner, following label recommendations.

Drywall - Fill cracks and holes with patching paste/spackle and sand smooth. Joint compounds must be cured and sanded smooth. Remove all sanding dust.

Wood - Sand any exposed wood to a fresh surface. Patch all holes and imperfections with a wood filler or putty and sand smooth.

Previously Painted Surfaces - If in sound condition, clean the surface of all foreign material. Smooth, hard or glossy coatings and surfaces should be dulled by abrading the surface. Apply a test area, allowing paint to dry one week before testing adhesion. If adhesion is poor, additional abrasion of the surface and/or removal of the previous coating may be necessary. Retest surface for adhesion. If paint is peeling or badly weathered, clean surface to sound substrate and treat as a new surface as above.

APPLICATION

Refer to the SDS before use.

Temperature: 50°F minimum
120°F maximum
(Air, surface, and material)
At least 5°F above dew point

Relative humidity: 85% maximum

The following is a guide. Changes in pressures and tip sizes may be needed for proper spray characteristics. Always purge spray equipment before use with listed reducer. Any reduction must be compatible with the existing environmental and application conditions.

Airless Spray
Pressure ..... 1800 - 2700 psi
Hose ..... 1/4" ID
Tip ..... .015" - .021"
Filter ..... 60 mesh
Reduction .....Not recommended

Brush ..... Nylon / polyester
Reduction .....Not recommended

Roller ..... 1/4 - 1/2" woven
Reduction .....Not recommended

If specific application equipment is listed above, equivalent equipment may be substituted.

CLEANUP INFORMATION

Clean spills, spatters, hands and tools immediately after use with soap and warm water. After cleaning, flush spray equipment with compliant cleanup solvent to prevent rusting of the equipment. Follow manufacturer's safety recommendations when using solvents.

CAUTION

Not for use on surfaces continuously wet or under water, such as bath tubs, sinks, showers, or countertops.

HOTW 06/24/2015 K45W00151 11 135

KOR

The information and recommendations set forth in this Product Data Sheet are based upon tests conducted by or on behalf of The Sherwin-Williams Company. Such information and recommendations set forth herein are subject to change and pertain to the product offered at the time of publication. Consult your Sherwin-Williams representative or visit www.paintdocs.com to obtain the most current version of the PDS and/or an SDS.

Attachment B

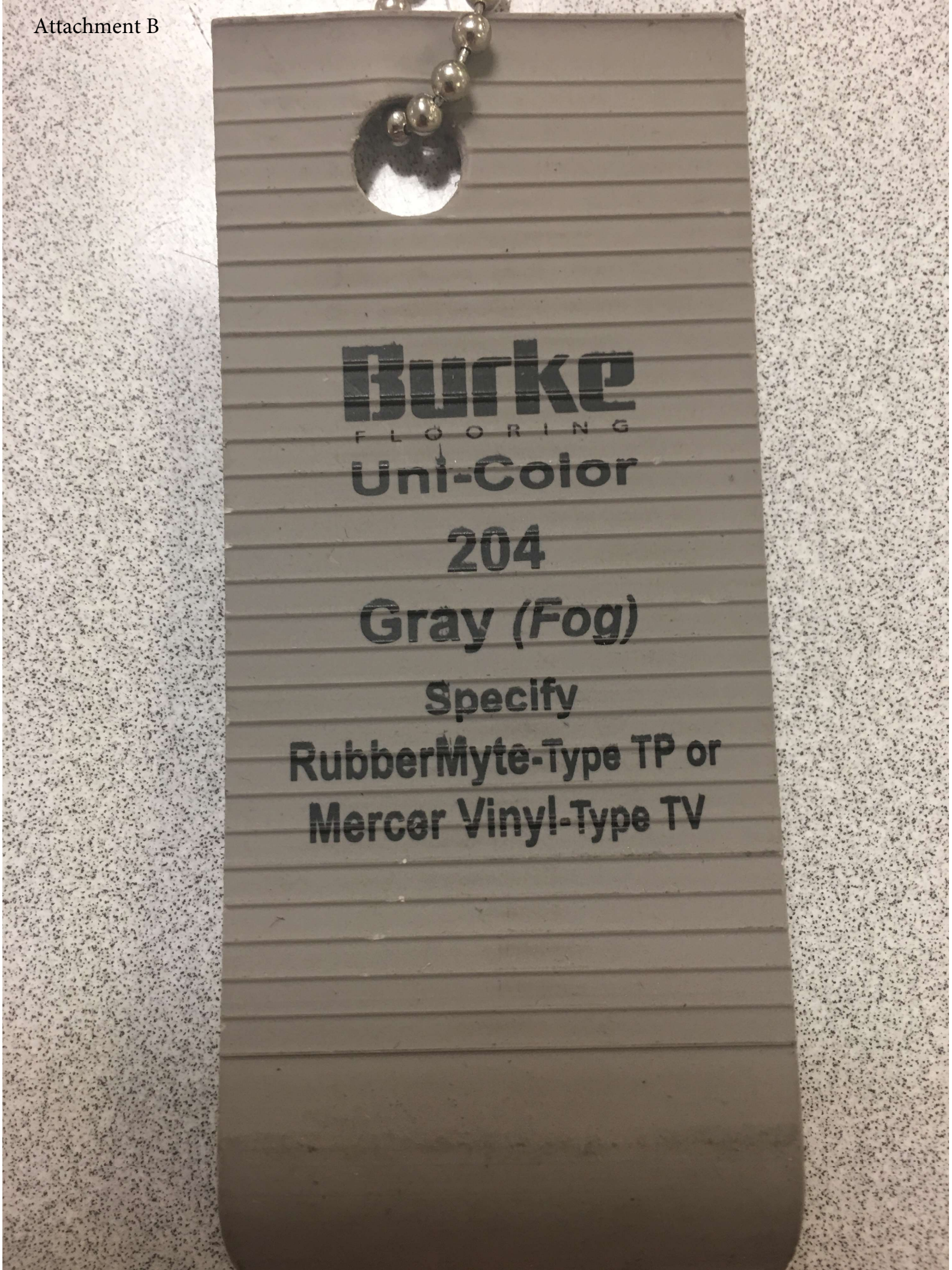

BASF
We create chemistry

Technical Data Guide

7 | 07 92 00
Joint Sealants

MasterSeal® CR 195

One-component, aliphatic, non-sag, elastomeric, polyurethane security sealant

FORMERLY SONOLASTIC® ULTRA

PACKAGING
– 300 ml (10.1 fl oz) cartridges, 30 per carton
– 20 fl oz (590 ml) ProPaks, 20 per carton

COLOR
Limestone, White and Aluminum Gray

YIELD
See page 3 for charts

STORAGE
Store in original, unopened containers away from heat and direct sunlight. Storing at elevated temperatures will reduce shelf life.

SHELF LIFE
1 year when properly stored

VOC CONTENT
118 g/L
less water and exempt solvents

DESCRIPTION
MasterSeal CR 195 is a one-component, moisture-curing, aliphatic, non-sag, polyurethane sealant for security and institutional uses requiring elasticity, abrasion and puncture resistance, with superior color integrity.

PRODUCT HIGHLIGHTS
- Aliphatic polyurethane technology with non-staining, non-yellowing, non-chalking characteristics
- Pick-resistant, making it excellent for security applications, schools and other public buildings
- High UV resistance prevents discoloration from sunlight
- Absence of tackiness creates a dirt free, self-cleaning surface
- Medium modulus provides superior puncture and abrasion resistance
- Superior gunability and workability for increased ease in tooling
- Movement capability ±25% expansion and contraction with joint movement
- Suitable for water immersion with documented performance in wet areas

SUBSTRATES
- Concrete, masonry
- Granite, marble
- Brick
- Metals
- Wood

APPLICATIONS
- Horizontal and vertical
- Interior and exterior
- Immersed in water
- Store fronts
- Expansion joints
- Curtain walls
- Panel walls
- Precast units
- Aluminum, vinyl, and wood window frames
- Prisons
- Schools
- Stadiums
- Parking decks
- Plazas
- Wastewater treatment plants
- Dams
- Spillways and storm drains
- Wetwells and manholes

Technical Data

Composition

MasterSeal CR 195 is a one-component, moisture-curing aliphatic polyurethane.

Compliances

- ASTM C 920, Type S, Grade NS, Class 25, Use NT, T, M, A, and I
- Federal Specification TT-S-00230C, Type II, Class A, when primed
- Corps of Engineers CRD-C-541, Type II, Class A
- USDA compliant for use in meat and poultry areas
- Canadian approval for use in areas that handle food, CFI

Typical Properties

PROPERTY	VALUE
Temperature range, ° F (° C)	-40 to 180 (-40 to 82)
Shrinkage	None

Test Data

PROPERTY	RESULTS	TEST METHOD
Movement capability, %	±25	ASTM C 719
100 % modulus, psi (MPa)	160 (1.1)	ASTM D 412
Tensile strength, psi (MPa)	600 (4.1)	ASTM D 412
Rheological, (sag in vertical displacement), at 120° F (49° C)	No sag	ASTM C 639
Ultimate elongation at break, %	600	ASTM D 412
Tear strength, pit	100	ASTM D 1004
Extrudability, 3 seconds	Passes	ASTM C 603
Hardness, Shore A, at standard conditions	50 ±5	ASTM C 661
Weight loss, after heat aging, %	9.2	ASTM C 792
Cracking and chalking, after heat aging	None	ASTM C 792
Tack-free time, hrs	< 72	ASTM C 679
Stain and color change	Passes	ASTM C 510
Bond durability, on glass, aluminum, and concrete, ±25% movement	Passes	ASTM C 719
Adhesion in peel*, pli		ASTM C 794
Primed dry		
Glass	37 CF**	
Aluminum	34 CF**	
Concrete	43 CF**	
Water immersion, 122° F (50° C)	Passes 10 weeks with cycling	ASTM C 1247

* Primed for water immersion dictated by ASTM C 920. Concrete and aluminum primed with P 173.
** Cohesive failure
Test results are averages obtained under laboratory conditions. Reasonable variations can be expected.

TABLE 1
Joint Width and Sealant Depth

JOINT WIDTH, IN (MM)	SEALANT DEPTH AT MIDPOINT, IN (MM)
¼–½ (6–13)	¼ (6)
½–¾ (13–19)	¼–⅜ (6–10)
¾–1 (19–25)	⅜–½ (10–13)
1–1½ (25–38)	½ (13)

Yield

LINEAR FEET PER GALLON*

JOINT DEPTH, (INCHES)	¼	⅜	½	⅝	¾	⅞	1	1½	JOINT WIDTH (INCHES) 2	3
¼	308	205	154	122	–	–	–	–	–	–
⅜	–	–	–	82	68	58	51	–	–	–
½	–	–	–	–	51	44	38	26	19	12

METERS PER LITER

JOINT DEPTH, (MM)	6	10	13	16	19	22	25	38	JOINT WIDTH (MM) 50	75
6	24.8	16.5	12.4	9.8	–	–	–	–	–	–
10	–	–	–	6.6	5.5	4.7	4.1	–	–	–
13	–	–	–	–	4.1	3.5	3.0	2.2	1.5	0.7

HOW TO APPLY

JOINT PREPARATION

1. The product may be used in sealant joints designed in accordance with SWR Institute's Sealants - The Professional's Guide.
2. In optimum conditions, the depth of the sealant should be ½ the width of the joint. The sealant joint depth (measured at the center) should always fall between the maximum depth of ½" and the minimum depth of ¼". Refer to Table 1.
3. In deep joints, the sealant depth must be controlled by closed cell backer rod or soft backer rod. Where the joint depth does not permit the use of backer rod, a bond breaker (polyethylene strip) must be used to prevent three-point bonding.
4. To maintain the recommended sealant depth, install backer rod by compressing and rolling it into the joint channel without stretching it lengthwise. Closed cell backer rod should be about ⅛" (3 mm) larger in diameter than the width of the joint to allow for compression. Soft backer rod should be approximately 25% larger in diameter than the joint width. The sealant does not adhere to it, and no separate bond breaker is required. Do not prime or puncture the backer rod.

SURFACE PREPARATION

Substrates must be structurally sound, fully cured, dry and clean. Substrates should always be free of the following: dirt, loose particles, oil, grease, asphalt, tar, paint, wax, rust, waterproofing or curing and parting compounds, membrane materials and sealant residue.

CONCRETE, STONE, AND OTHER MASONRY

Clean by grinding, sandblasting, or wire brushing to expose a sound surface free of contamination and laitance.

WOOD

New and weathered wood must be clean, dry and sound. Scrape away loose paint to bare wood. Any coatings on wood must be tested to verify adhesion of sealant or to determine an appropriate primer.

METAL

Remove scale, rust, and lose coatings from metal to expose a bright white surface. Any coatings on metal must be tested to verify adhesion of sealant or to determine an appropriate primer.

PRIMING

1. MasterSeal CR 195 is considered a non-priming sealant, but special circumstances or substrates may require a primer. It is the user's responsibility to check the adhesion of the cured sealant on typical test joints at the project site before and during application. Refer to product data sheet on MasterSeal P 173 or MasterSeal P 176, and consult Technical Services for additional information.
2. For immersion applications, MasterSeal P 173 must be used.
3. Apply primer full strength with a brush or clean cloth. A light, uniform coating is sufficient for most surfaces. Porous surfaces require more primer; however, do not over-apply.
4. Allow primer to dry before applying MasterSeal CR 195. Depending on temperature and humidity, primer will be tack-free in 15–120 minutes. Priming and sealing must be done on the same day.

APPLICATION

1. MasterSeal CR 195 comes ready to use. Apply using professional grade caulking gun. Do not open cartridges, ProPaks, or pails until preparatory work has been completed.
2. Fill joints from the deepest point to the surface by holding an appropriately sized nozzle against the back of the joint.
3. Dry tooling is recommended. Proper tooling results in the correct bead shape, neat joints and optimal adhesion.

CURING TIME

The cure of MasterSeal CR 195 varies with temperature and humidity. The following times assume 75° F (24° C), 50% relative humidity, and a joint ½" width by ¼" depth (13 by 6 mm).
– Skins: overnight or within 24 hours
– Full cure: approximately 1 week
– Immersion service: 21 days

CLEAN UP

1. Immediately after use, clean equipment with MasterSeal 990 or xylene. Use proper precautions when handling solvents.
2. Remove cured sealant by cutting with a sharp-edged tool.
3. Remove thin films by abrading.

FOR BEST PERFORMANCE

- Do not allow uncured MasterSeal CR 195 to come into contact with alcohol-based materials or solvents.
- Do not apply polyurethane sealants in the vicinity of uncured silicone sealants or uncured MasterSeal NP 150.
- MasterSeal CR 195 should not come in contact with oil-based caulking, silicone sealants, polysulfides or fillers impregnated with oil, asphalt or tar.
- All horizontal applications require the use of MasterSeal P 173.
- Protect unopened containers from heat and direct sunlight.
- In cool or cold weather, store container at room temperature for at least 24 hours before using.
- When CR 195 is to be used in areas subject to water immersion, cure for 21 days at 70˚ F (25˚ C) and 50% relative humidity. Allow longer cure time at lower temperatures and humidity.
- Do not use in swimming pools or other submerged conditions where the sealant will be exposed to strong oxidizers. Avoid submerged conditions where water temperatures will exceed 120˚ F (50˚ C).
- Lower temperatures will extend curing times.
- Do not apply over freshly treated wood; treated wood must have weathered for at least 6 months.
- Pursuant to accepted industry standards and practices, using rigid paints and/or coatings over flexible sealants can result in a loss of adhesion of the applied paint and/or coating, due to the potential movement of the sealant. However, should painting and/or coating be desired it is required that the applicator of the paint and/or coating conduct on-site testing to determine compatibility and adhesion.
- Substrates such as copper, stainless and galvanized steel typically require the use of a primer; MasterSeal P 173 or MasterSeal P 176 is acceptable. For Kynar coatings, use MasterSeal P 173 only. An adhesion test is recommended for any other questionable substrate.
- MasterSeal CR 195 can be applied below freezing temperatures only if substrates are completely dry, free of moisture and clean. Contact Technical Service for more information.
- Proper application is the responsibility of the user. Field visits by BASF personnel are for the purpose of making technical recommendations only and not for supervising or providing quality control on the jobsite.

HEALTH, SAFETY AND ENVIRONMENTAL

Read, understand and follow all Safety Data Sheets and product label information for this product prior to use. The SDS can be obtained by visiting www.master-builders-solutions.basf.us, e-mailing your request to basfbscst@basf.com or calling 1(800)433-9517. Use only as directed.
For medical emergencies only, call ChemTrec® 1(800)424-9300.

LIMITED WARRANTY NOTICE

BASF warrants this product to be free from manufacturing defects and to meet the technical properties on the current Technical Data Guide, if used as directed within shelf life. Satisfactory results depend not only on quality products but also upon many factors beyond our control. BASF MAKES NO OTHER WARRANTY OR GUARANTEE, EXPRESS OR IMPLIED, INCLUDING WARRANTIES OF MERCHANTABILITY OR FITNESS FOR A PARTICULAR PURPOSE WITH RESPECT TO ITS PRODUCTS. The sole and exclusive remedy of Purchaser for any claim concerning this product, including but not limited to, claims alleging breach of warranty, negligence, strict liability or otherwise, is the replacement of product or refund of the purchase price, at the sole option of BASF. Any claims concerning this product must be received in writing within one (1) year from the date of shipment and any claims not presented within that period are waived by Purchaser. BASF WILL NOT BE RESPONSIBLE FOR ANY SPECIAL, INCIDENTAL, CONSEQUENTIAL (INCLUDING LOST PROFITS) OR PUNITIVE DAMAGES OF ANY KIND.

Purchaser must determine the suitability of the products for the intended use and assumes all risks and liabilities in connection therewith. This information and all further technical advice are based on BASF's present knowledge and experience. However, BASF assumes no liability for providing such information and advice including the extent to which such information and advice may relate to existing third party intellectual property rights, especially patent rights, nor shall any legal relationship be created by or arise from the provision of such information and advice. BASF reserves the right to make any changes according to technological progress or further developments. The Purchaser of the Product(s) must test the product(s) for suitability for the intended application and purpose before proceeding with a full application of the product(s). Performance of the product described herein should be verified by testing and carried out by qualified experts.

BASF Corporation
Construction Systems

889 Valley Park Drive, Shakopee, MN 55379
www.master-builders-solutions.basf.us

Customer Service 1(800)433.9517
Technical Service 1(800)243.6739

BASF Construction Chemicals, LLC Registered to ISO 9001:2000 Certificate No. A1-0263

MIX Paper from responsible sources FSC® C101537

© 2015 BASF Corporation Form No.1017894 rev 10/15

Attachment D

SEAL KRETE

CLEAR-SEAL

CONCRETE PROTECTIVE SEALER

PRODUCT DATA SHEET

DESCRIPTION: Clear protective finish for painted, stained or bare concrete & masonry surfaces; premium water-based urethane-fortified acrylic. Available in Satin & Gloss sheens.

Typical Uses:

✓ Pool Decks ✓ Patios & Porches ✓ Brick & Stone
✓ Driveways & Garages ✓ Exposed Aggregate ✓ Slate & Saltillo
✓ Pavers & Stamped Concrete

Important: *Read all directions thoroughly. Recommended: Wear gloves and safety glasses.*

SURFACE PREP*: Note: *The surface should be clean and dry. You may need an oil stain remover such as SEAL-KRETE® Oil Stain Remover to lift stubborn oil stains. Pressure-washing is recommended.*

Bare Concrete: Concrete must have cured for a minimum of 30 days. Etch smooth-finished concrete (such as basement or garage floors) with a concrete etching solution like SEAL-KRETE Clean-N-Etch. ***Note:*** *If etching with muriatic acid the area must be neutralized before proceeding. For more information visit www.seal-krete.com.*

Painted Surfaces: For use over one-part water-based coatings only; not recommended over acid-based stains or oil-based coatings. Freshly painted surfaces must have cured for a minimum of 72 hours. Paint must be sound (not blistering or peeling). Existing painted surfaces should be cleaned with a solution of Trisodium Phosphate (TSP) and water. Rinse well and allow to dry.

APPLICATION: Read "LIMITATIONS" section before use. This product is ready to use; do not dilute. Stir gently; do not shake. Apply in light, even coats. One coat is recommended; however, over porous surfaces (like saltillo tile) or when a higher sheen is desired, apply a second coat. ***Note:*** *Sealer goes on milky white but dries clear.*

Roller: Dampen roller, remove excess water, then saturate roller with product. Keep a wet edge while rolling. Do not allow to puddle, foam or run. (Use a 1/4" nap for smooth surfaces, 3/8" nap for rough or porous surfaces.)

Pump Sprayer: Set at a fine spray and apply using a circular motion. To eliminate puddling or to achieve a more uniform finish, backroll immediately after spraying.

COVERAGE: 150–300 sq.ft. per gallon, depending on surface porosity.

DRY TIME: Dry to touch in 1 hour at 77°F (25°C) 50% RH. Recoat in 2 hours. Dry to foot traffic in 24 hours. Will accept vehicular traffic in 72 hours. Dry times should be extended in colder climates.

CLEAN-UP & STORAGE: Clean tools with soap and water immediately after use. Store in a dry area. KEEP FROM FREEZING.

MAINTENANCE: Clean with a mild soap and water solution. Do not use solvent-based cleaners.

LIMITATIONS: Temperatures should be 50° to 90°F (10° to 32°C) and should not fall below 50°F (10°C) within 24 hours of application. Do not apply if rain is expected within 12 hours. Do not use over acid-based stains, 2-part epoxies or oil-based paints. Do not use on glazed tile. Do not use in areas subject to hydrostatic pressure. Smooth-finished concrete may be slippery when wet; consider using an anti-skid additive like SEAL-KRETE Clear Grip on high foot traffic areas.

**Sanding or removing paint containing lead may be hazardous. For information contact the National Lead Information Center at 1-800-424-LEAD or www.epa.gov/lead.*

CAUTION: EYE IRRITANT. Contains Dipropylene Glycol N-Propyl Ether. Avoid contact with eyes and prolonged contact with skin. Do not ingest.

FIRST AID: In case of eye contact, flush with water for 15 minutes. If irritation persists, get medical attention. In case of skin contact, wash thoroughly with soap and water. If swallowed, drink 1-2 glasses of water and immediately contact medical services regarding any instructions to induce vomiting. **KEEP OUT OF REACH OF CHILDREN – DO NOT TAKE INTERNALLY.**

Also Available in a Low VOC Formula

Product	No.	Unit	UPC Code	Carton Bar Code	Carton Size (W x D x H)	Cube / Wt. (cubic ft / lbs)	Carton Qty	Pallet Qty
Clear-Seal Satin Protective Sealer	604001	1 gal	0 15944 60401 6	1 00 15944 60401 3	14.38 x 14.38 x 8.5	1.02 / 36.68	4	45 cs
Clear-Seal Satin Protective Sealer	604005	5 gal	0 15944 60405 4	—	—	1.35 / 45.17	1	36 ea
Clear-Seal Gloss Protective Sealer	606001	1 gal	0 15944 60601 0	1 00 15944 60601 7	14.38 x 14.38 x 8.5	1.02 / 38.13	4	45 cs
Clear-Seal Gloss Protective Sealer	606005	5 gal	0 15944 60605 8	—	—	1.35 / 45.17	1	36 ea
Clear-Seal Gloss Protective Sealer Low VOC	607001	1 gal	0 15944 60701 7	1 00 15944 60701 4	14.38 x 14.38 x 8.5	1.02 / 37.79	4	45 cs

CLEAR-SEAL

CONCRETE PROTECTIVE SEALER

- EXCELLENT DURABILITY
- INTERIOR/EXTERIOR USE
- FOR COATED & UNCOATED HORIZONTAL SURFACES

TECHNICAL INFORMATION

- Clean-up: soap and water
- Shelf life: 2 years min. (closed container)
- Visual appearance: milky white (wet); dries clear
- Gloss: 25 (1 coat)
- Gloss retention: excellent
- Tire marking: resistant to most tires
- Propietary urethane-acrylic blend
- ASTM G-53 ultraviolet resistance: excellent
- ASTM D-1640: dry-to-touch 15 min; dry to recoat 2 hours; dry to light foot traffic 24 hours; dry to vehicular traffic 72 hours
- ASTM D-3359B intercoat adhesion: excellent

	Satin	Gloss	Gloss Low Voc
• ASTM D-3363 Konig hardness:	70	64	60
• VOC – EPA Method 24 – Waterproofing Sealer Category	< 100 g/L	< 250 g/L	< 100 g/L

CHEMICAL/SOLVENT RESISTANCE - ASTM D-1308

(One hour spot test)

- Gasoline: resistant
- Oil: resistant
- Water: resistant
- Salt: resistant
- Chlorine: resistant

FEATURES

- Seals and protects painted, stained or bare concrete
- Seals in color
- Reduces pockmarking and cracking
- Clear finish, will not yellow
- Premium, urethane-fortified acrylic formula

LIQUID PROPERTIES

- Water-Based
- Odor: Low

LIMITED WARRANTY: Manufacturer/Seller makes no warranty of any kind except that this product is free from defect and is of merchantable quality. Buyer remedy for breach of warranty is limited to replacement of SEAL-KRETE product or refund of purchase price. Convenience Products will not be responsible for labor or the cost of labor for removal or application of any product.

TECHNICAL SUPPORT: For more information on surface prep or application guidelines, or to obtain a Material Safety Data Sheet, call 1-800-323-7357, M–F (8:00 am–5:00 pm EST) or visit our website at www.seal-krete.com.

WATERPROOFS & SEALS PAINTED, STAINED, TEXTURED & BARE CONCRETE SURFACES

RESISTANT TO MOISTURE, SALT, CHLORINE, OIL & HOT TIRE PICKUP

HIGHLY DURABLE NON-YELLOWING ACRYLIC

WATERPROOFS CONCRETE SURFACES

RESISTS HOT TIRE PICKUP

PROVIDES A DURABLE, NON-YELLOWING FINISH

Convenience Products
306 Gandy Rd., Auburndale, FL 33823 USA
www.seal-krete.com
Questions or comments? e-mail: tech@seal-krete.com
or call 1-800-323-7357

PREMIUM PROTECTIVE SEALER

64051-100812-SK

PRODUCT DATA

SEAL KRETE®

CLEAR GRIP

NON-SLIP GRIT ADDITIVE

SEAL-KRETE® Clear Grip is a durable, micronized polymeric aggregate developed for use as an anti-skid additive to floor paint or sealers. Because it's a lightweight plastic grit, Clear Grip remains suspended longer. It adds slight texture to the finish without changing colors. It has excellent resistance to chemicals and detergents and helps extend paint life. Clear Grip can be used in water-based, solvent-based alkyd, urethane or epoxy coatings.

DIRECTIONS: While stirring continuously, add up to 3.2 ounces of Clear Grip to one gallon of coating. Follow application instructions on paint or sealer.

- In thinner products, occasional stirring during use may be required to keep grit uniform.
- If applying more than one coat, add Clear Grip to the topcoat only.
- Do not reapply over wet areas.

LIMITATIONS: Clear Grip is not recommended for repellents, silicones or wax-based coatings.

CAUTIONS: Use with adequate ventilation. Use appropriate, properly fitted respiratory protection filter apparatus and avoid breathing dust and particles.

FIRST AID: If you experience dizziness, headache or eye watering, get to fresh air; leave the area. In case of eye contact, flush with large amounts of water. Get medical attention if irritation persists. Do not take internally. If swallowed, get medical attention immediately. See Material Safety Data Sheet for additional information.

KEEP OUT OF REACH OF CHILDREN.

WARRANTY: Manufacturer/seller makes no warranty of any kind except that this product is free from defect and is of merchantable quality. Buyer remedy for breach of warranty is limited to replacement of product or refund of purchase price. Convenience Products will not be responsible for labor or the cost of labor for removal or application of any product.

TECHNICAL SUPPORT: For more information on surface prep or application guidelines, or to obtain a Material Safety Data Sheet, call 1-800-323-7357, M-F (8:00 am – 5:00 pm EST) or visit our website at www.seal-krete.com.

- **For Sealers, Acrylic Paints, Epoxies**
- **Lightweight for longer suspension**
- **Adds texture without changing color**

Dries Clear in Sealers!

PRODUCT NUMBER	UNIT SIZE	UPC CODE	CARTON QTY	CARTON CODE	CARTON SIZE (L X W X H)	CARTON SIZE (CUBIC FEET)	CARTON WT (lbs).	PALLET QTY. (CARTONS)
402002	3.2 oz.	0 15944 40202 5	12	9 00 15944 40202 8	13 x 6.5 x 7	.34	3.25	105

64010-051110-SK

PROFESSIONAL QUALITY

Mix with paint or sealer to add a measure of safety to slippery steps, stairs and walkways.

Convenience Products
306 Gandy Rd., Auburndale, FL 33823 USA
www.seal-krete.com
Questions or comments? e-mail: tech@seal-krete.com
or call 1-800-323-7357

Attachment F

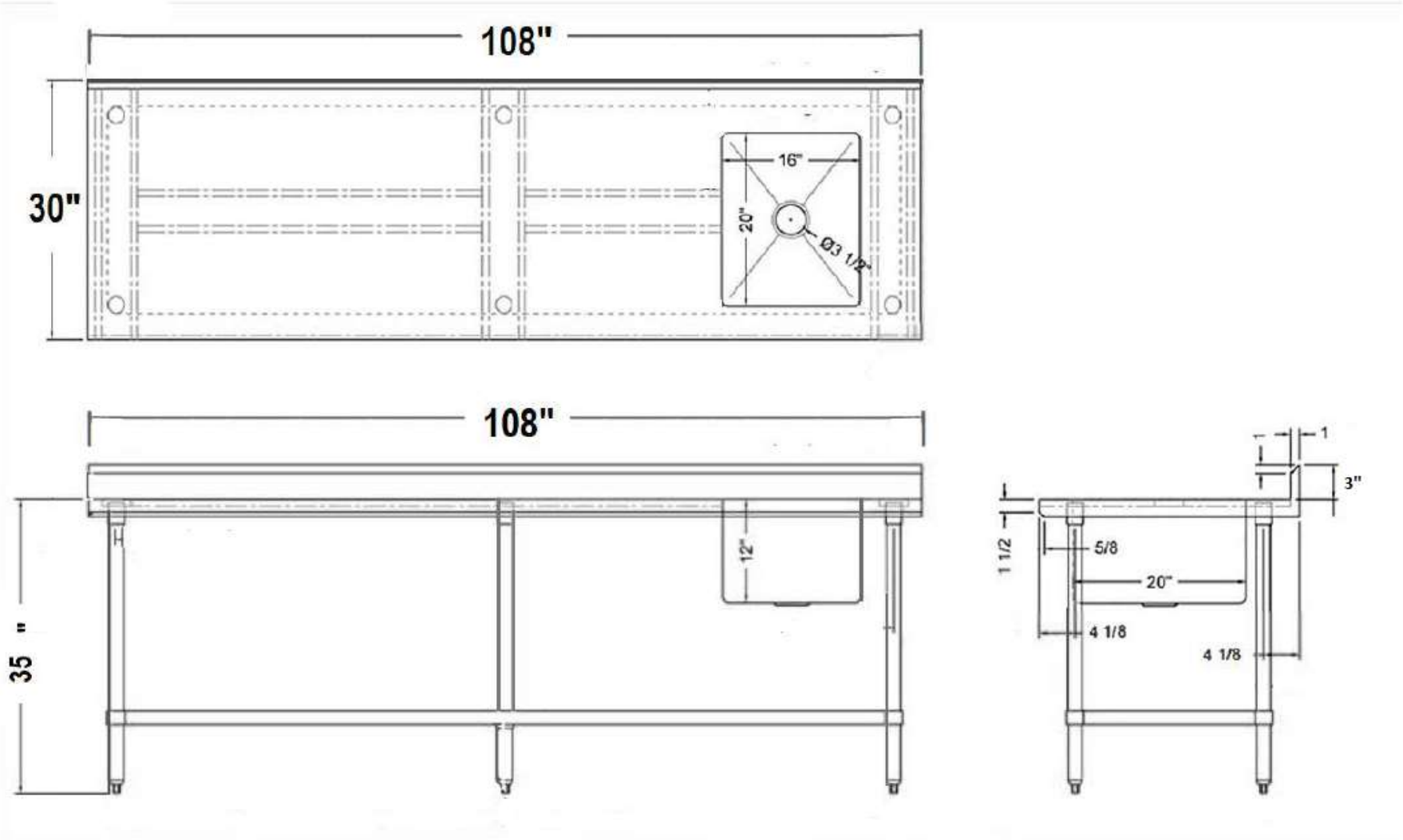

*Table shown for illustration proposes only. Drawing not to scale.

Attachment G

Max Flow Rate: 2.5 GPM (9.5 LPM)

Moen M-Dura Chrome 2-Handle Utility Faucet

Description

- Chrome finish is highly reflective for a mirror-like look that works with any decorating style
- 2-handle lever handles make it easy to adjust water flow or temperature
- Complies with Americans with Disabilities Act (ADA) specifications
- Heavy duty
- Vandal resistant
- 5 year limited warranty
- Meets current legislation, including AB1953 (California) and S152 (Vermont)
- Unrestricted flow
- 4-in centerset design allows for easy installation

Specifications

Color/Finish Family	Chrome	**Supply Lines Included**	✕
Manufacturer Color/Finish	Chrome	**ADA Compliant**	✓
Collection Name	M-Dura	**Spout Reach (Inches)**	6.5
Handle Type	Lever	**Spout Height (Inches)**	4
Number of Holes for Installation	2-hole	**Max Flow Rate**	2.5 GPM (9.5 LPM)
Mounting Type	Sink mount	**Lowe's Exclusive**	✕
Items Required for Standard Installation	Wrench, screwdriver, plumber's tape	**Handle(s) Included**	✓
Pulldown Sprayer	✕		

Attachment H

INFORMATION REGARDING
CONFLICT OF INTEREST QUESTIONNAIRE

During the 79th Legislative Session, House Bill 914 was signed into law effective September 1, 2015, which added Chapter 176 to the Texas Local Government Code. Recent changes have been made to Chapter 176 pursuant to HB23, which passed the 84th Legislative Session. Chapter 176 mandates the *public disclosure of certain information concerning persons doing business or seeking to do business with Collin County, including family, business, and financial relationships such persons may have with Collin County officers or employees involved in the planning, recommending, selecting and contracting of a vendor for this procurement.*

For a copy of Form CIQ and CIS:

http://www.ethics.state.tx.us/filinginfo/conflict_forms.htm

The vendor acknowledges by doing business or seeking to do business with Collin County that he/she has been notified of the requirements under Chapter 176 of the Texas Local Government Code and that he/she is solely responsible for complying with the terms and conditions therein. Furthermore, any individual or business entity seeking to do business with Collin County who does not comply with this practice may risk award consideration of any County contract.

For a listing of current Collin County Officers:
http://www.collincountytx.gov/government/Pages/officials.aspx

The following County employees will be involved in the planning, recommending, selecting, and contracting for the attached procurement:

Department:
Bill Burke - Director of Building Projects
Brad Harris - Building Projects Coordinator

Purchasing:
Michalyn Rains, CPPO, CPPB – Purchasing Agent
Michelle Charnoski, CPPB – Assistant Purchasing Agent
J. D. Griffin, CPPB – Buyer II

Commissioners' Court:
Chris Hill – County Judge
Susan Fletcher – Commissioner Precinct No. 1
Cheryl Williams – Commissioner Precinct No. 2
Darrell Hale – Commissioner Precinct No. 3
Duncan Webb – Commissioner Precinct No. 4

CONFLICT OF INTEREST QUESTIONNAIRE

FORM CIQ

For vendor doing business with local governmental entity

This questionnaire reflects changes made to the law by H.B. 23, 84th Leg., Regular Session.

This questionnaire is being filed in accordance with Chapter 176, Local Government Code, by a vendor who has a business relationship as defined by Section 176.001(1-a) with a local governmental entity and the vendor meets requirements under Section 176.006(a).

By law this questionnaire must be filed with the records administrator of the local governmental entity not later than the 7th business day after the date the vendor becomes aware of facts that require the statement to be filed. *See* Section 176.006(a-1), Local Government Code.

A vendor commits an offense if the vendor knowingly violates Section 176.006, Local Government Code. An offense under this section is a misdemeanor.

OFFICE USE ONLY

Date Received

1 **Name of vendor who has a business relationship with local governmental entity.**

2 ☐ **Check this box if you are filing an update to a previously filed questionnaire.** (The law requires that you file an updated completed questionnaire with the appropriate filing authority not later than the 7th business day after the date on which you became aware that the originally filed questionnaire was incomplete or inaccurate.)

3 **Name of local government officer about whom the information is being disclosed.**

Name of Officer

4 **Describe each employment or other business relationship with the local government officer, or a family member of the officer, as described by Section 176.003(a)(2)(A). Also describe any family relationship with the local government officer. Complete subparts A and B for each employment or business relationship described. Attach additional pages to this Form CIQ as necessary.**

A. Is the local government officer or a family member of the officer receiving or likely to receive taxable income, other than investment income, from the vendor?

☐ Yes ☐ No

B. Is the vendor receiving or likely to receive taxable income, other than investment income, from or at the direction of the local government officer or a family member of the officer AND the taxable income is not received from the local governmental entity?

☐ Yes ☐ No

5 **Describe each employment or business relationship that the vendor named in Section 1 maintains with a corporation or other business entity with respect to which the local government officer serves as an officer or director, or holds an ownership interest of one percent or more.**

6 ☐ Check this box if the vendor has given the local government officer or a family member of the officer one or more gifts as described in Section 176.003(a)(2)(B), excluding gifts described in Section 176.003(a-1).

7

Signature of vendor doing business with the governmental entity

Date

CONFLICT OF INTEREST QUESTIONNAIRE
For vendor doing business with local governmental entity

A complete copy of Chapter 176 of the Local Government Code may be found at http://www.statutes.legis.state.tx.us/Docs/LG/htm/LG.176.htm. For easy reference, below are some of the sections cited on this form.

Local Government Code § 176.001(1-a): "Business relationship" means a connection between two or more parties based on commercial activity of one of the parties. The term does not include a connection based on:

(A) a transaction that is subject to rate or fee regulation by a federal, state, or local governmental entity or an agency of a federal, state, or local governmental entity;

(B) a transaction conducted at a price and subject to terms available to the public; or

(C) a purchase or lease of goods or services from a person that is chartered by a state or federal agency and that is subject to regular examination by, and reporting to, that agency.

Local Government Code § 176.003(a)(2)(A) and (B):

(a) A local government officer shall file a conflicts disclosure statement with respect to a vendor if:

***

(2) the vendor:

(A) has an employment or other business relationship with the local government officer or a family member of the officer that results in the officer or family member receiving taxable income, other than investment income, that exceeds $2,500 during the 12-month period preceding the date that the officer becomes aware that

(i) a contract between the local governmental entity and vendor has been executed; or

(ii) the local governmental entity is considering entering into a contract with the vendor;

(B) has given to the local government officer or a family member of the officer one or more gifts that have an aggregate value of more than $100 in the 12-month period preceding the date the officer becomes aware that:

(i) a contract between the local governmental entity and vendor has been executed; or

(ii) the local governmental entity is considering entering into a contract with the vendor.

Local Government Code § 176.006(a) and (a-1)

(a) A vendor shall file a completed conflict of interest questionnaire if the vendor has a business relationship with a local governmental entity and:

(1) has an employment or other business relationship with a local government officer of that local governmental entity, or a family member of the officer, described by Section 176.003(a)(2)(A);

(2) has given a local government officer of that local governmental entity, or a family member of the officer, one or more gifts with the aggregate value specified by Section 176.003(a)(2)(B), excluding any gift described by Section 176.003(a-1); or

(3) has a family relationship with a local government officer of that local governmental entity.

(a-1) The completed conflict of interest questionnaire must be filed with the appropriate records administrator not later than the seventh business day after the later of:

(1) the date that the vendor:

(A) begins discussions or negotiations to enter into a contract with the local governmental entity; or

(B) submits to the local governmental entity an application, response to a request for proposals or bids, correspondence, or another writing related to a potential contract with the local governmental entity; or

(2) the date the vendor becomes aware:

(A) of an employment or other business relationship with a local government officer, or a family member of the officer, described by Subsection (a);

(B) that the vendor has given one or more gifts described by Subsection (a); or

(C) of a family relationship with a local government officer.

HB89/CHAPTER 2270 VERIFICATION

I, _____, the undersigned representative of
(PRINT NAME)

_____
(COMPANY)

do hereby verify that the company named-above, under the provisions of Subtitle F, Title 10, Government Code Chapter 2270:

1. Does not boycott Israel currently; and
2. Will not boycott Israel during the term of the contract.

Pursuant to Section 2270.001, Texas Government Code:

1. *"Boycott Israel" means refusing to deal with, terminating business activities with, or otherwise taking any action that is intended to penalize, inflict economic harm on, or limit commercial relations specifically with Israel, or with a person or entity doing business in Israel or in an Israeli-controlled territory, but does not include an action made for ordinary business purposes; and*

2. *"Company" means a for-profit sole proprietorship, organization, association, corporation, partnership, joint venture, limited partnership, limited liability partnership, or any limited liability company, including a wholly owned subsidiary, majority-owned subsidiary, parent company or affiliate of those entities or business associations that exist to make a profit.*

_____	_____
SOLICITATION NUMBER	SIGNATURE OF COMPANY REPRESENTATIVE
_____	_____
DATE	TITLE

Form **W-9**
(Rev. December 2014)
Department of the Treasury
Internal Revenue Service

Request for Taxpayer Identification Number and Certification

Give Form to the requester. Do not send to the IRS.

Print or type
See **Specific Instructions** on page 2.

1 Name (as shown on your income tax return). Name is required on this line; do not leave this line blank.

2 Business name/disregarded entity name, if different from above

3 Check appropriate box for federal tax classification; check only **one** of the following seven boxes:
☐ Individual/sole proprietor or single-member LLC ☐ C Corporation ☐ S Corporation ☐ Partnership ☐ Trust/estate
☐ Limited liability company. Enter the tax classification (C=C corporation, S=S corporation, P=partnership) ▶
Note. For a single-member LLC that is disregarded, do not check LLC; check the appropriate box in the line above for the tax classification of the single-member owner.
☐ Other (see instructions) ▶

4 Exemptions (codes apply only to certain entities, not individuals; see instructions on page 3):
Exempt payee code (if any)
Exemption from FATCA reporting code (if any)
(Applies to accounts maintained outside the U.S.)

5 Address (number, street, and apt. or suite no.)

Requester's name and address (optional)

6 City, state, and ZIP code

7 List account number(s) here (optional)

Part I Taxpayer Identification Number (TIN)

Enter your TIN in the appropriate box. The TIN provided must match the name given on line 1 to avoid backup withholding. For individuals, this is generally your social security number (SSN). However, for a resident alien, sole proprietor, or disregarded entity, see the Part I instructions on page 3. For other entities, it is your employer identification number (EIN). If you do not have a number, see *How to get a TIN* on page 3.

Note. If the account is in more than one name, see the instructions for line 1 and the chart on page 4 for guidelines on whose number to enter.

Social security number
☐☐☐ – ☐☐ – ☐☐☐☐

or

Employer identification number
☐☐ – ☐☐☐☐☐☐☐

Part II Certification

Under penalties of perjury, I certify that:

1. The number shown on this form is my correct taxpayer identification number (or I am waiting for a number to be issued to me); and
2. I am not subject to backup withholding because: (a) I am exempt from backup withholding, or (b) I have not been notified by the Internal Revenue Service (IRS) that I am subject to backup withholding as a result of a failure to report all interest or dividends, or (c) the IRS has notified me that I am no longer subject to backup withholding; and
3. I am a U.S. citizen or other U.S. person (defined below); and
4. The FATCA code(s) entered on this form (if any) indicating that I am exempt from FATCA reporting is correct.

Certification instructions. You must cross out item 2 above if you have been notified by the IRS that you are currently subject to backup withholding because you have failed to report all interest and dividends on your tax return. For real estate transactions, item 2 does not apply. For mortgage interest paid, acquisition or abandonment of secured property, cancellation of debt, contributions to an individual retirement arrangement (IRA), and generally, payments other than interest and dividends, you are not required to sign the certification, but you must provide your correct TIN. See the instructions on page 3.

Sign Here **Signature of U.S. person ▶** **Date ▶**

General Instructions

Section references are to the Internal Revenue Code unless otherwise noted.

Future developments. Information about developments affecting Form W-9 (such as legislation enacted after we release it) is at *www.irs.gov/fw9*.

Purpose of Form

An individual or entity (Form W-9 requester) who is required to file an information return with the IRS must obtain your correct taxpayer identification number (TIN) which may be your social security number (SSN), individual taxpayer identification number (ITIN), adoption taxpayer identification number (ATIN), or employer identification number (EIN), to report on an information return the amount paid to you, or other amount reportable on an information return. Examples of information returns include, but are not limited to, the following:

- Form 1099-INT (interest earned or paid)
- Form 1099-DIV (dividends, including those from stocks or mutual funds)
- Form 1099-MISC (various types of income, prizes, awards, or gross proceeds)
- Form 1099-B (stock or mutual fund sales and certain other transactions by brokers)
- Form 1099-S (proceeds from real estate transactions)
- Form 1099-K (merchant card and third party network transactions)
- Form 1098 (home mortgage interest), 1098-E (student loan interest), 1098-T (tuition)
- Form 1099-C (canceled debt)
- Form 1099-A (acquisition or abandonment of secured property)

Use Form W-9 only if you are a U.S. person (including a resident alien), to provide your correct TIN.

If you do not return Form W-9 to the requester with a TIN, you might be subject to backup withholding. See *What is backup withholding?* on page 2.

By signing the filled-out form, you:

1. Certify that the TIN you are giving is correct (or you are waiting for a number to be issued),

2. Certify that you are not subject to backup withholding, or

3. Claim exemption from backup withholding if you are a U.S. exempt payee. If applicable, you are also certifying that as a U.S. person, your allocable share of any partnership income from a U.S. trade or business is not subject to the withholding tax on foreign partners' share of effectively connected income, and

4. Certify that FATCA code(s) entered on this form (if any) indicating that you are exempt from the FATCA reporting, is correct. See *What is FATCA reporting?* on page 2 for further information.